Chapter 9-Digital to Analog Conversion

Introduction

- *Digital-to-analog conversion is the process of changing one of the characteristics of an analog signal based on the information in digital data.*

- *Digital data needs to be carried on an analog signal.*
- *A carrier signal (frequency f_c) performs the function of transporting the digital data in an analog waveform.*
- *The analog carrier signal is manipulated to uniquely identify the digital data being carried.*

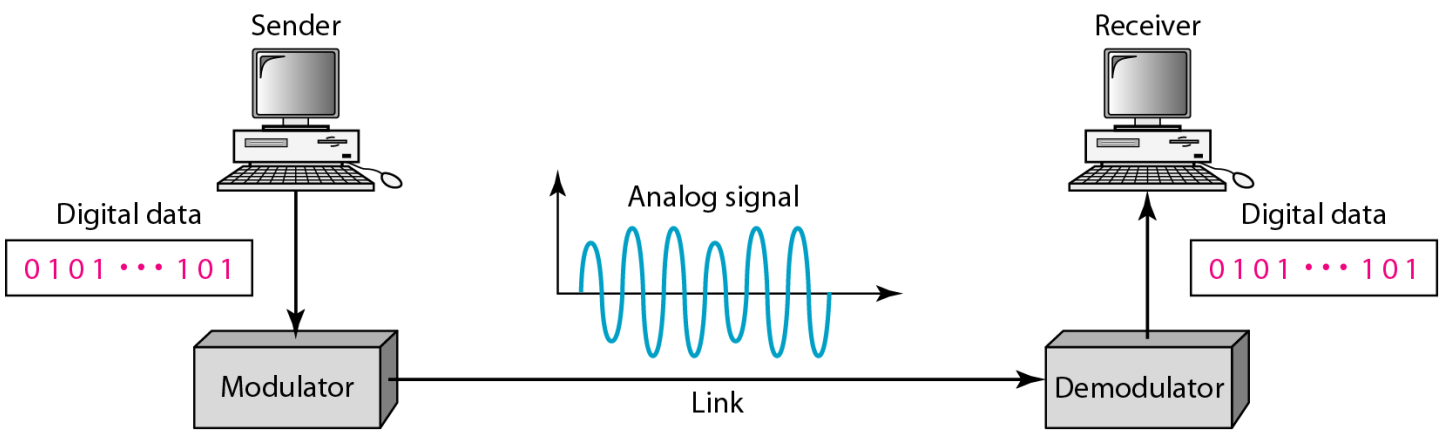

Types of digital to analog conversion

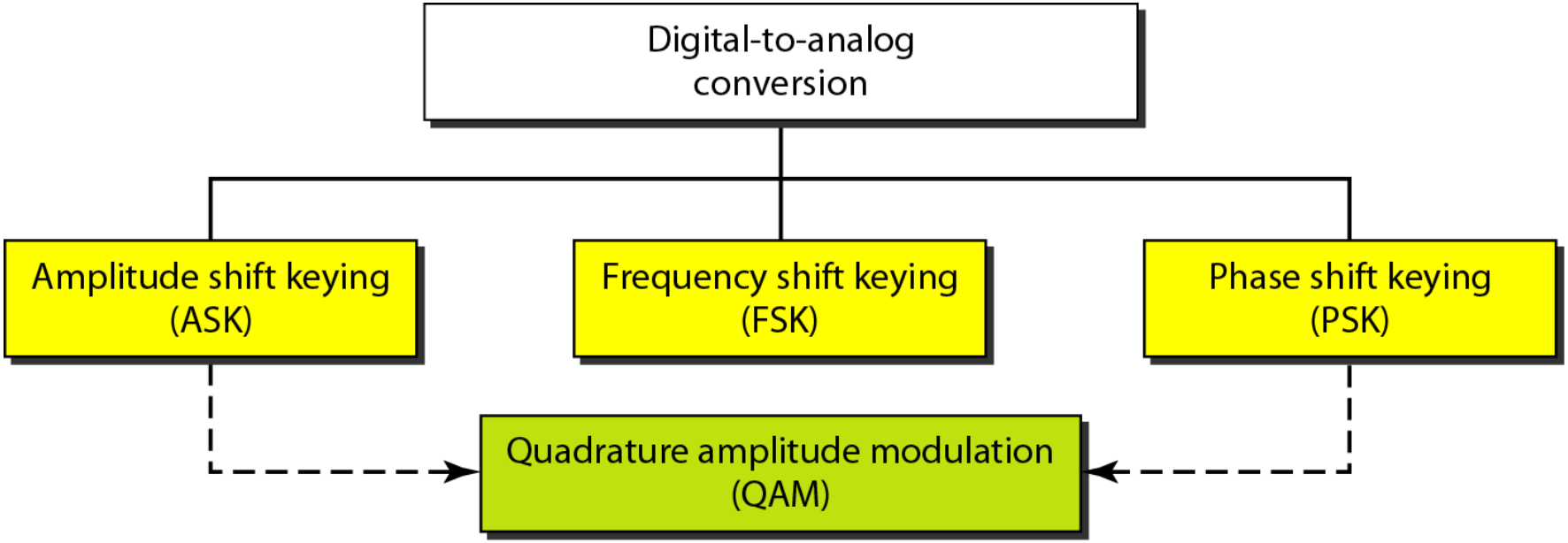

Bit rate and Baud Rate

Bit rate, N, is the number of bits per second (bps). Baud rate is the number of signal elements per second (bauds).

In the analog transmission of digital data, the signal or baud rate is less than or equal to the bit rate.

S=Nx1/r bauds

Where r is the number of data bits per signal element.

Example

•*An analog signal carries 4 bits per signal element. If 1000 signal elements are sent per second, find the bit rate.*

Solution

In this case, r = 4, S = 1000, and N is unknown. We can find the value of N from

$$S = N \times \frac{1}{r} \qquad \text{or} \qquad N = S \times r = 1000 \times 4 = 4000 \text{ bps}$$

Example

An analog signal has a bit rate of 8000 bps and a baud rate of 1000 baud. How many data elements are carried by each signal element? How many signal elements do we need?

Solution

In this example, S = 1000, N = 8000, and r and L are unknown. We find first the value of r and then the value of L.

$$S = N \times \frac{1}{r} \quad \rightarrow \quad r = \frac{N}{S} = \frac{8000}{1000} = 8 \text{ bits/baud}$$

$$r = \log_2 L \quad \rightarrow \quad L = 2^r = 2^8 = 256$$

Amplitude Shift Keying (ASK)

- *ASK is implemented by changing the amplitude of a carrier signal to reflect amplitude levels in the digital signal.*
- *Both frequency and phase remains constant while the amplitude changes.*
- *Which voltage represents 1 and which voltage represents 0 are left to the system designer.*
- *For example: a digital "1" could not affect the signal, whereas a digital "0" would, by making it zero.*
- *Bit duration is the period of time that defines 1 bit.*
- *The peak amplitude during each bit duration is constant*

Amplitude Shift Keying (ASK)

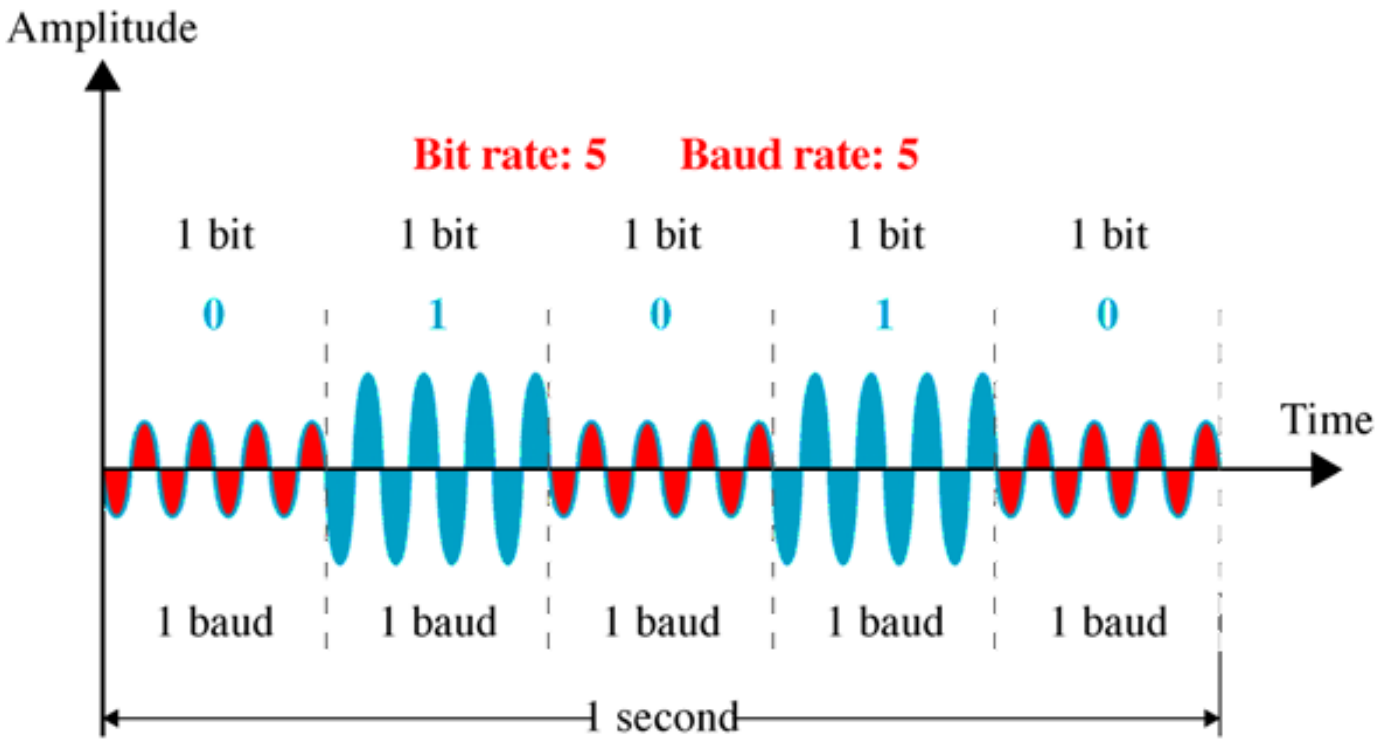

On-off-keying (OOK) or Binary ASK

- *A popular ASK technique is called on-off-keying (OOK). In OOK one of the bit values is represented by no voltage.*

- *The advantage is a reduction in the amount of energy required to transmit information.*

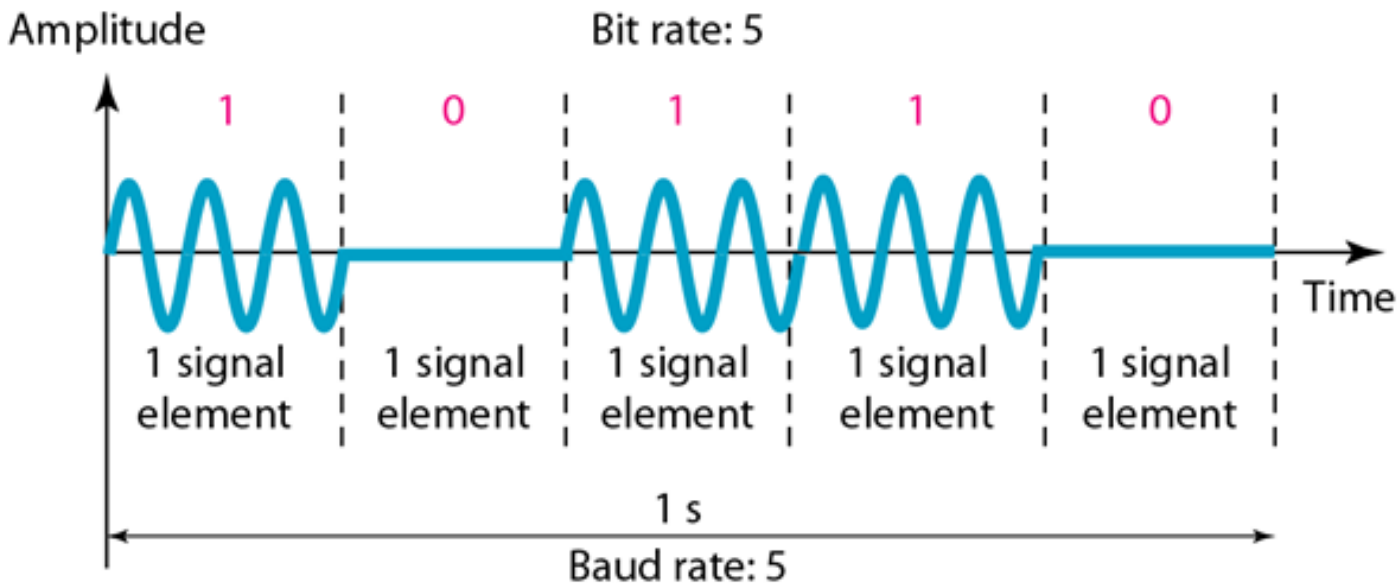

Bandwidth of ASK

Recall that the bandwidth of a signal is the total range of frequencies occupied by the signal.

When we decompose an ASK-modulated signal, we get a spectrum of many simple frequencies.

However, the most significant one are those between $f_c - S/2$ *And* $f_c + S/2$.

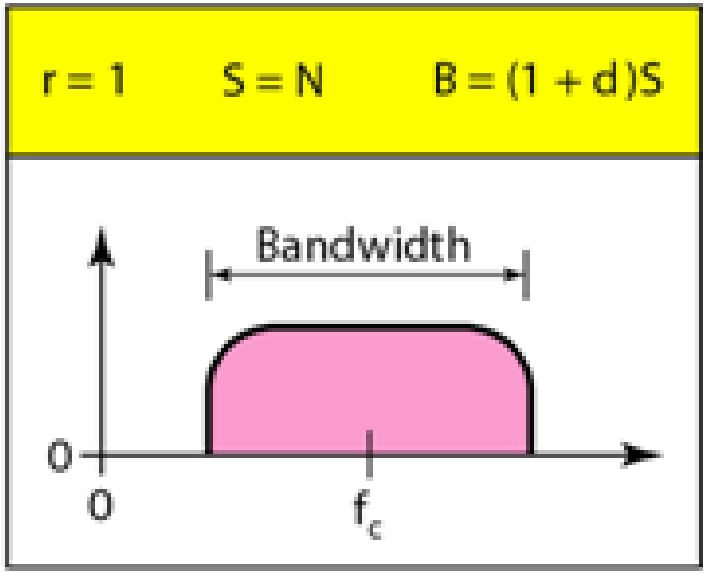

Bandwidth of ASK

- *The bandwidth B of ASK is proportional to the signal rate S.*

$$B = (1+d)S$$

- *"d" is due to modulation and filtering, lies between 0 and 1.*

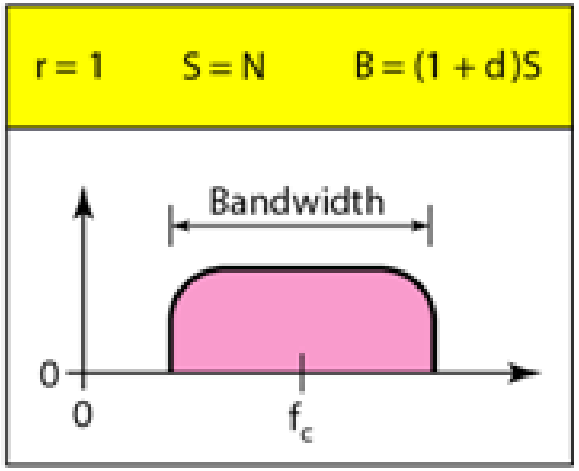

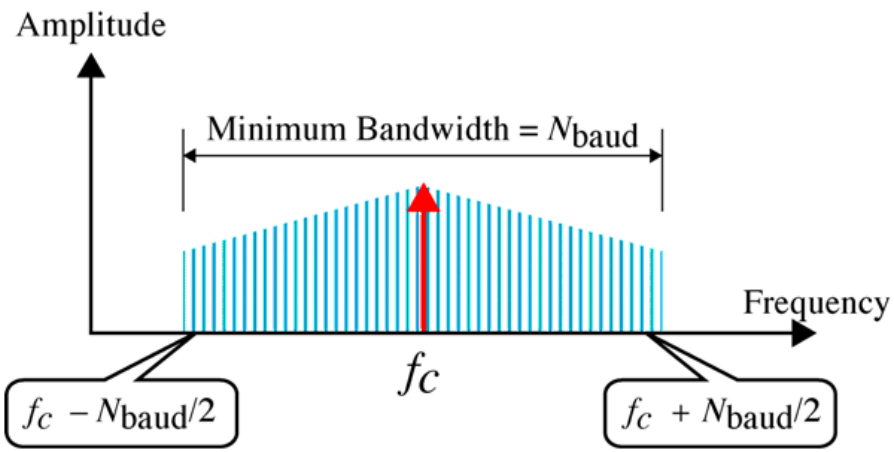

The minimum bandwidth required for transmission is equal to the baud rate.

Implementation of ASK

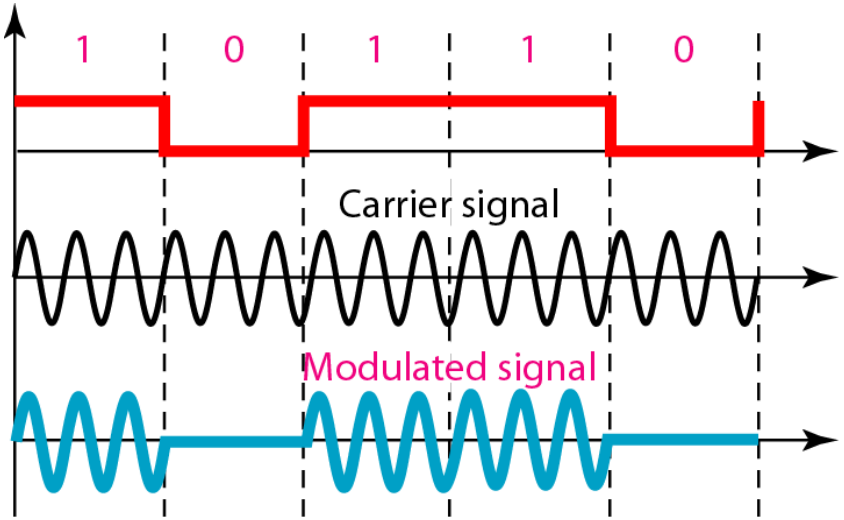

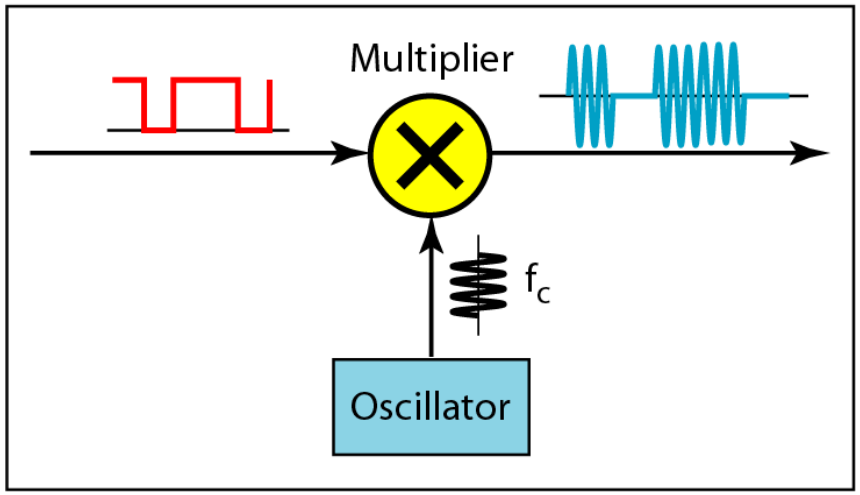

Example

We have an available bandwidth of 100 kHz which spans from 200 to 300 kHz. What are the carrier frequency and the bit rate if we modulated our data by using ASK with d = 1?

Solution

The middle of the bandwidth is located at 250 kHz. This means that our carrier frequency can be at f_c = 250 kHz. We can use the formula for bandwidth to find the bit rate (with d = 1 and r = 1).

$$B = (1 + d) \times S = 2 \times N \times \frac{1}{r} = 2 \times N = 100 \text{ kHz} \quad \rightarrow \quad N = 50 \text{ kbps}$$

Example

In data communications, we normally use full-duplex links with communication in both directions. We need to divide the bandwidth into two with two carrier frequencies, as shown in Figure below. The figure shows the positions of two carrier frequencies and the bandwidths. The available bandwidth for each direction is now 50 kHz, which leaves us with a data rate of 25 kbps in each direction.

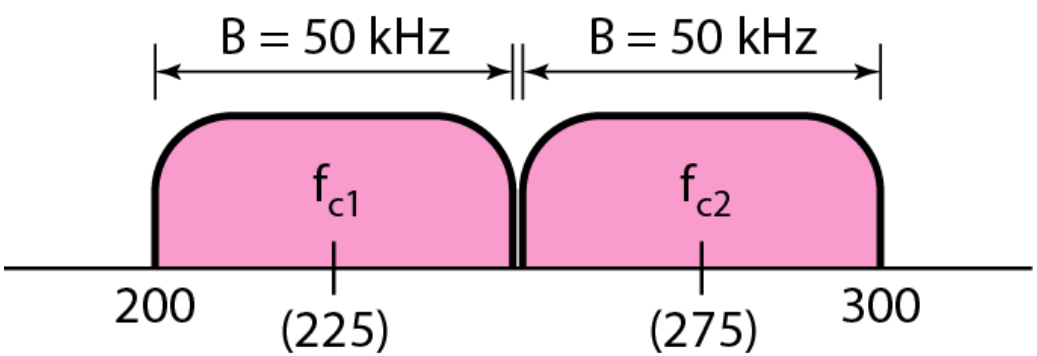

Frequency Shift Keying (FSK)

In FSK, the frequency of the carrier signal is varied to represent binary 1and 0.
The frequency of the signal during each duration is constant.
Both peak amplitude and phase remains constant.
For example, a "1" could be represented by $f_1 = f_c + \Delta f$*, and a "0" could be represented by* $f_2 = f_c - \Delta f$*.*

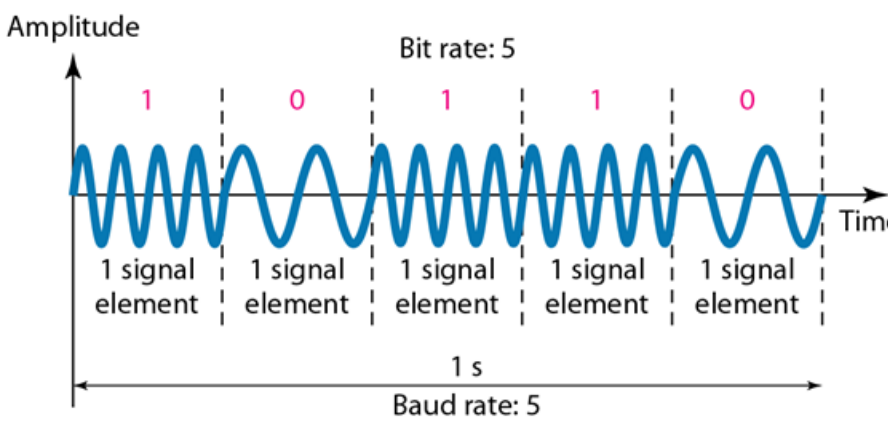

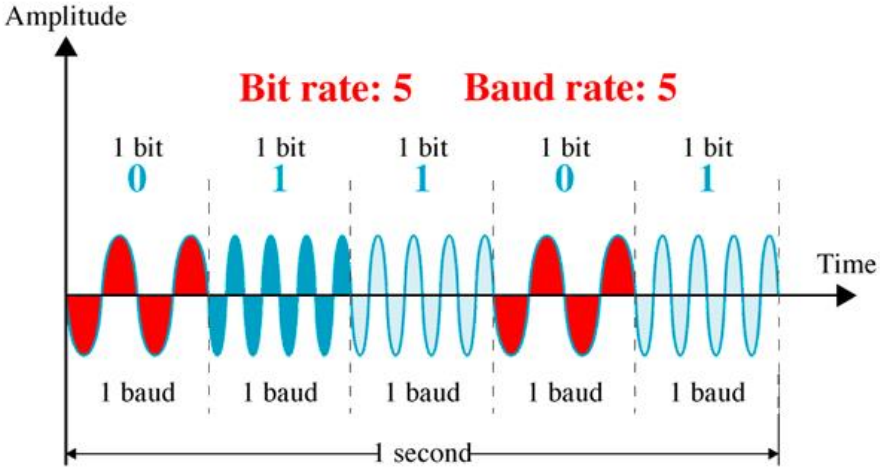

Bandwidth of FSK

- *If the difference between the two frequencies (f_1 and f_2) is $2\Delta f$, then the required BW B will be:*

$$B = (1+d)\times S + 2\Delta f$$

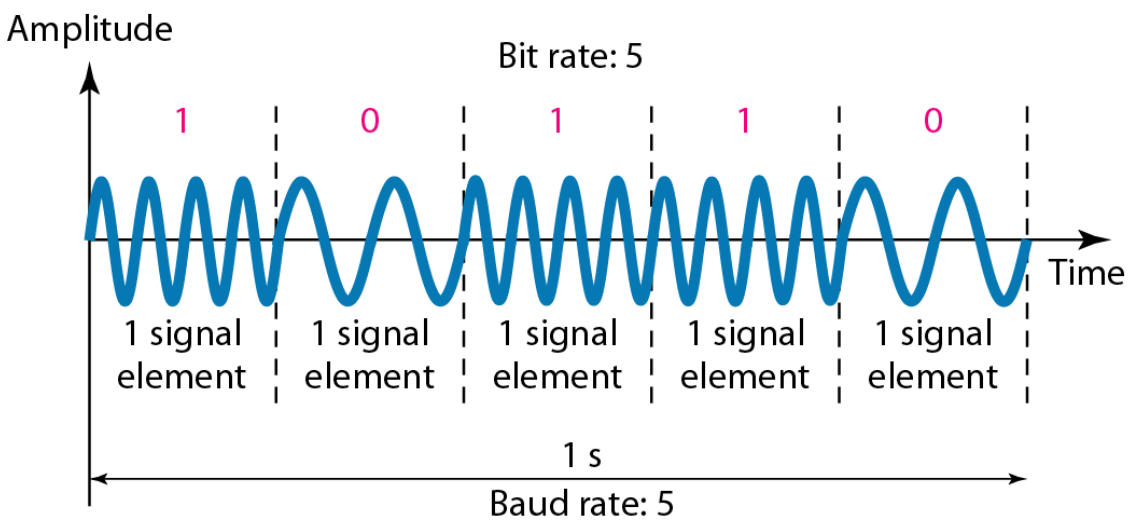

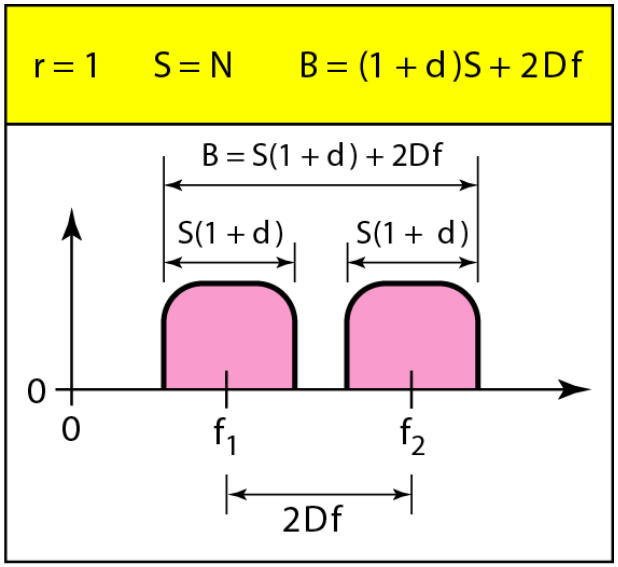

Example

We have an available bandwidth of 100 kHz which spans from 200 to 300 kHz. What should be the carrier frequency and the bit rate if we modulated our data by using FSK with d = 1 and 2Δf =50kHz?

Solution

$$B = (1+d) \times S + 2\Delta f = 100 \Rightarrow 2S = 50\ \text{kHz} \quad S = 25\ \text{kbaud} \quad N = 25\ \text{kbps}$$

Coherent and Non Coherent

- *In a non-coherent FSK scheme, when we change from one frequency to the other, we do not adhere to the current phase of the signal.*
- *In coherent FSK, the switch from one frequency signal to the other only occurs at the same phase in the signal.*

Implementation of FSK

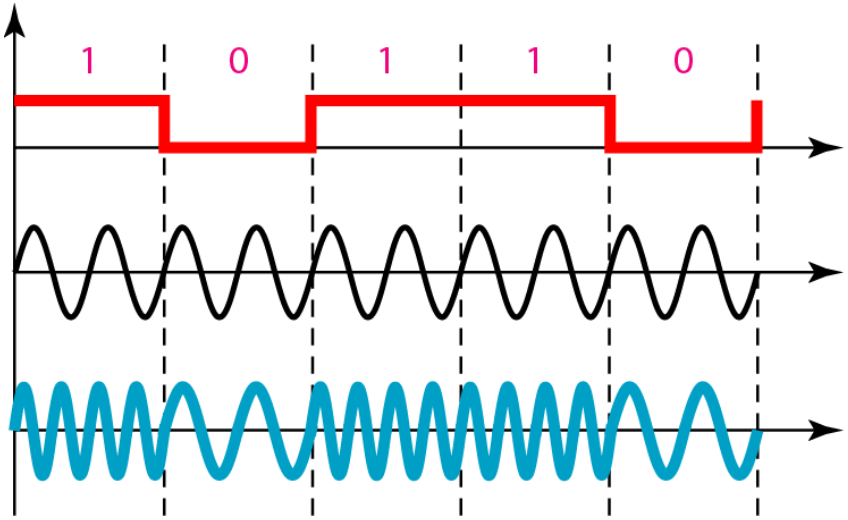

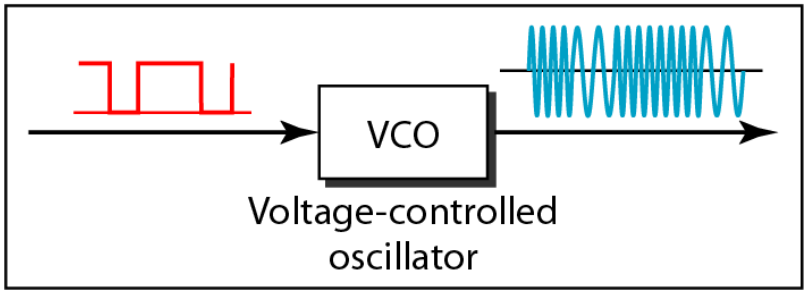

Phase Shift Keying (PSK)

- *We vary the phase shift of the carrier signal to represent digital data.*
- *Both peak amplitude and frequency remain constant as the phase changes.*
- *The bandwidth requirement, B is:*

$$B = (1+d)\times S$$

- *PSK is much more robust than ASK as it is not that vulnerable to noise, which changes amplitude of the signal.*

Binary Phase Shift Keying (PSK)

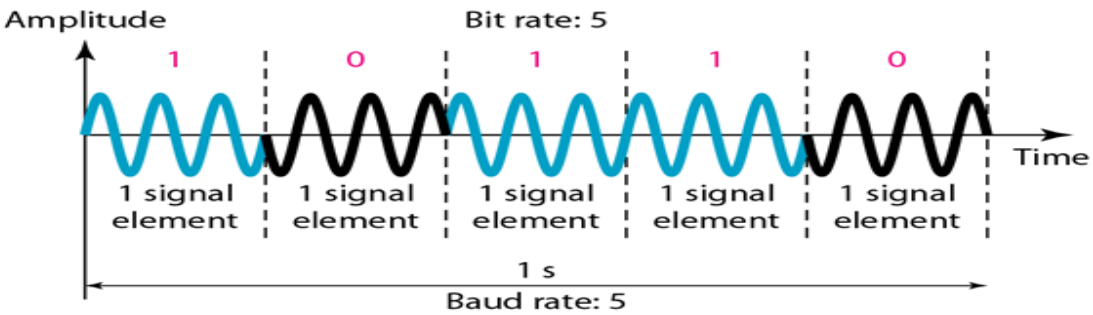

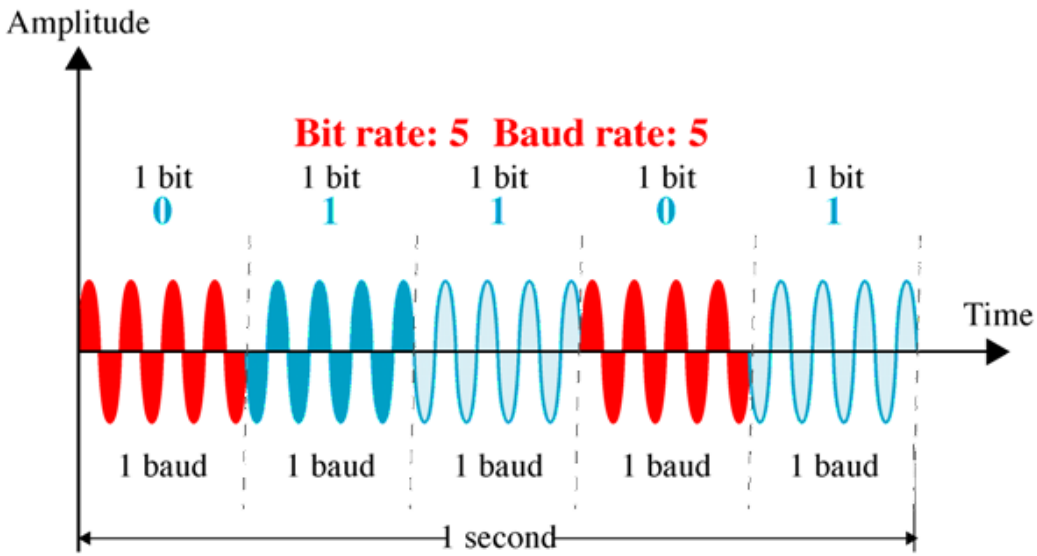

The above method is often called 2-PSK, or binary PSK, because two different phases (0^0 and 180^0) are used.

Binary Phase Shift Keying (PSK)

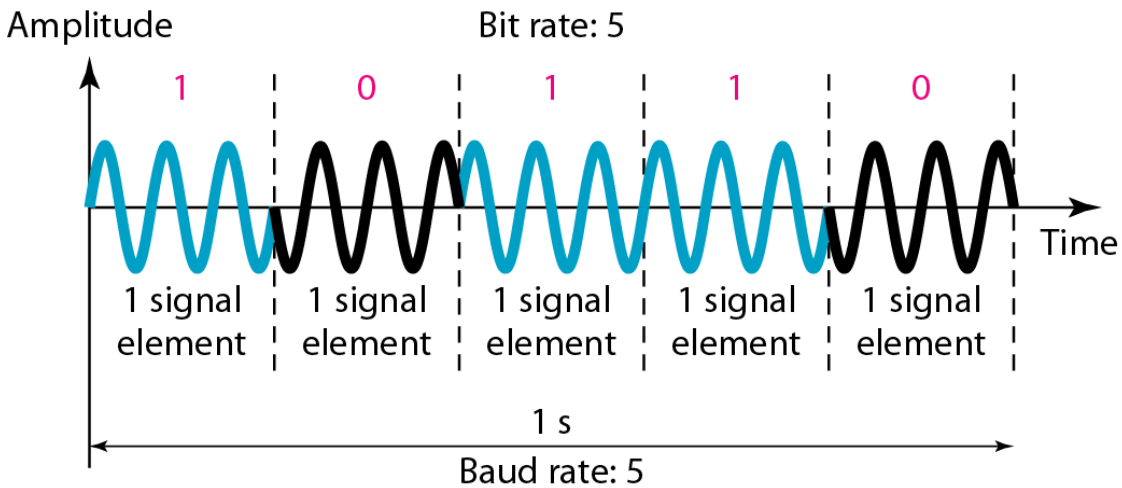

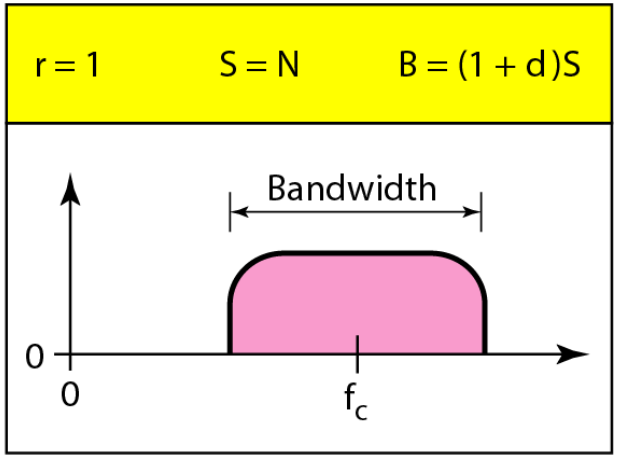

Implementation of BPSK

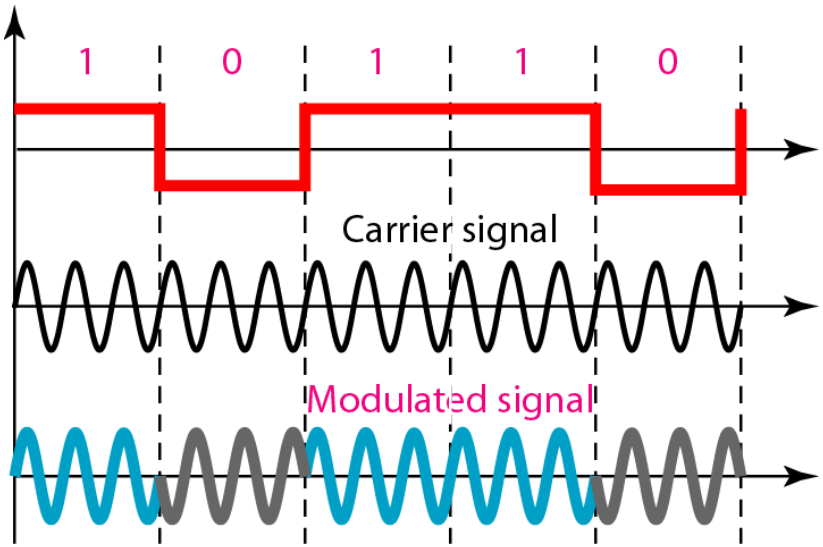

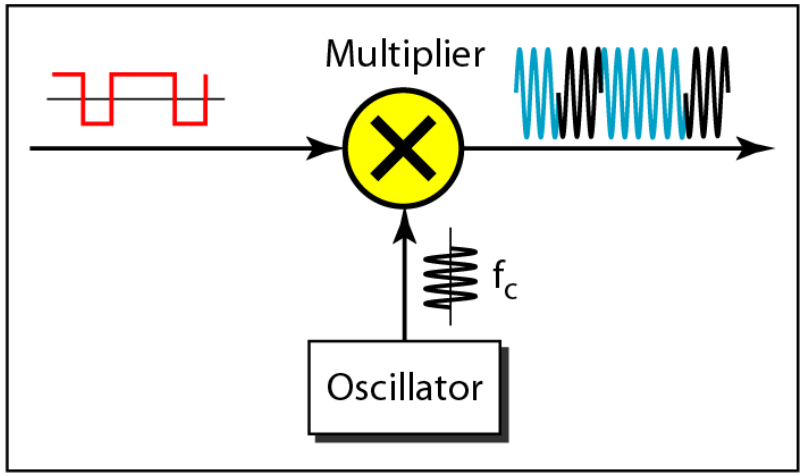

Quadrature PSK

- *To increase the bit rate, we can code 2 or more bits onto one signal element.*

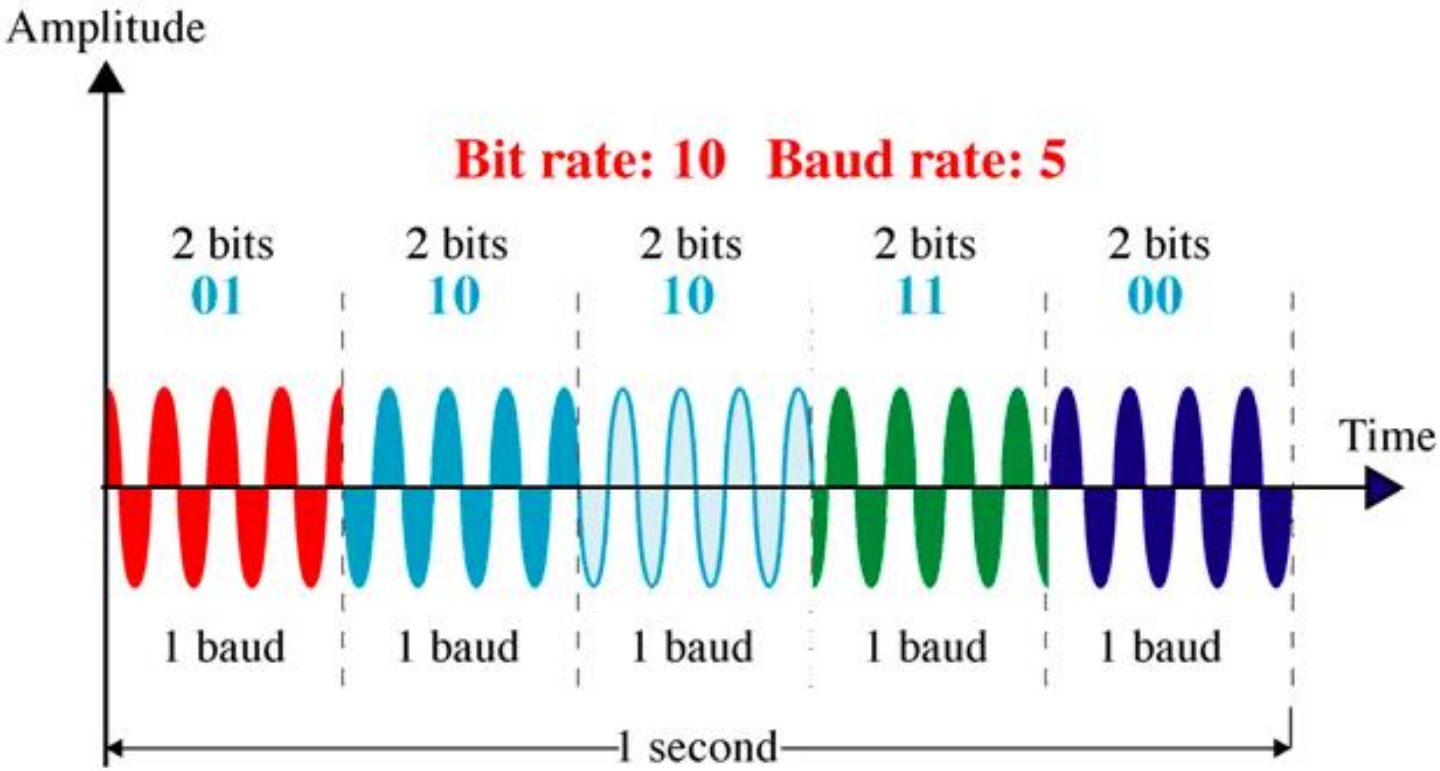

Example

Find the bandwidth for a signal transmitting at 12 Mbps for QPSK. The value of d = 0.

Solution

For QPSK, 2 bits is carried by one signal element. This means that r = 2. So the signal rate (baud rate) is S = N × (1/r) = 6 Mbaud. With a value of d = 0, we have B = S = 6 MHz.

Constellation Diagram

- *A constellation diagram helps us to define the amplitude and phase of a signal when we are using two carriers, one in quadrature of the other.*
- *The X-axis represents the in-phase carrier and the Y-axis represents quadrature carrier.*

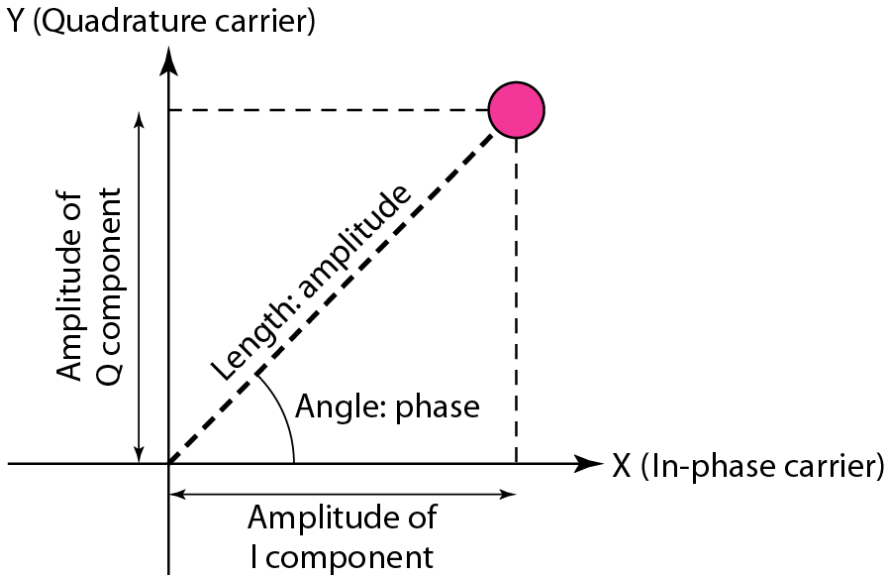

PSK Constellation

Bit	Phase
0	0
1	180

Bits

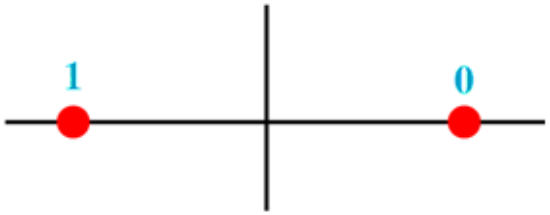

Constellation diagram

4-PSK Characteristics

Dibit	Phase
00	0
01	90
10	180
11	270

Dibit
(2 bits)

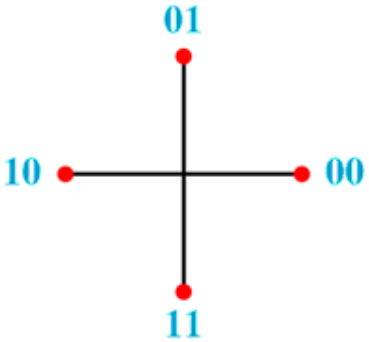

Constellation diagram

8-PSK Characteristics

Tribit	Phase
000	0
001	45
010	90
011	135
100	180
101	225
110	270
111	315

Tribits
(3 bits)

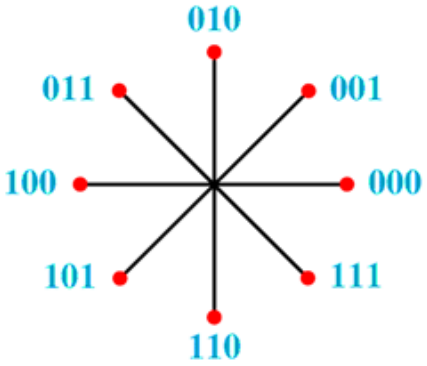

Constellation diagram

Example

Show the constellation diagrams for an ASK (OOK), BPSK, and QPSK signals.

Solution

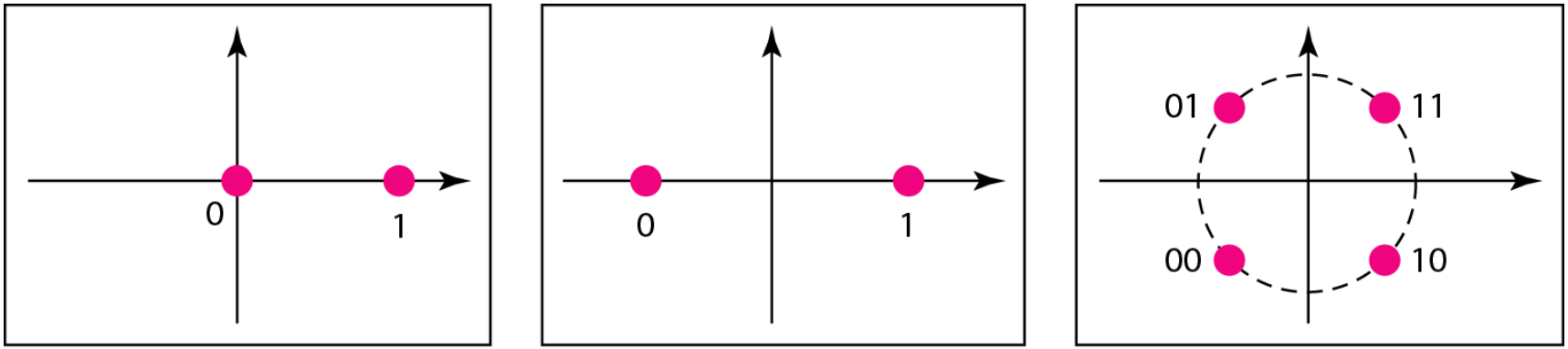

a. ASK (OOK) b. BPSK c. QPSK

QAM (Quadrature Amplitude Modultion)

Quadrature amplitude modulation is a combination of ASK and PSK.

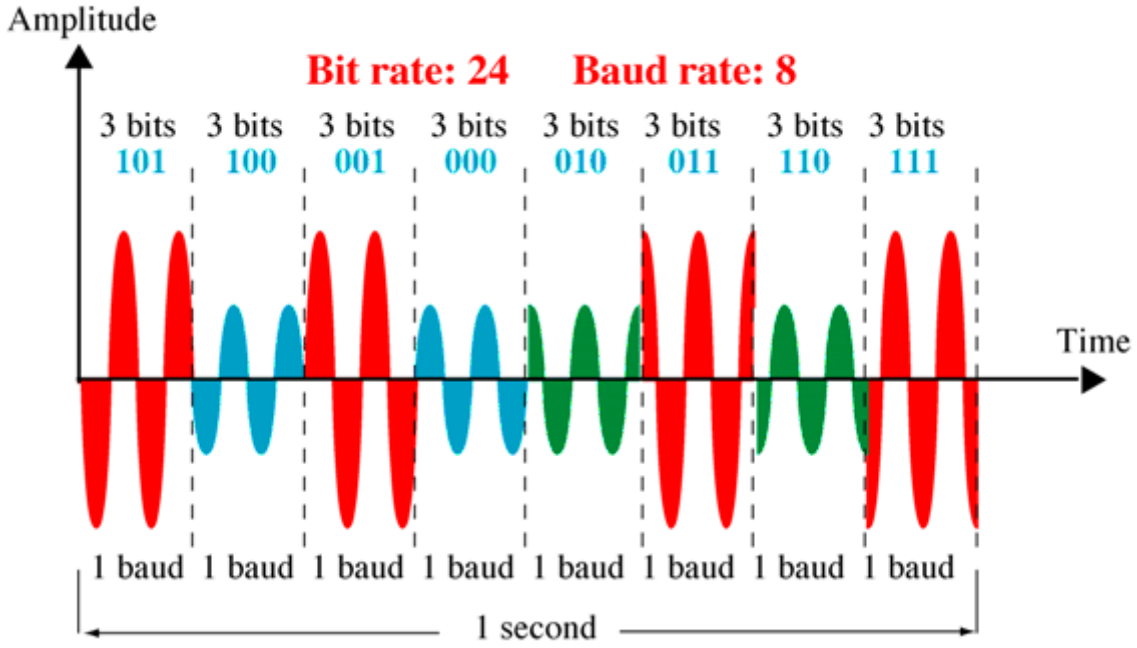

QAM (Quadrature Amplitude Modultion)

- *Possible variations of QAM are numerous.*
- *Theoretically, any measurable number of changes in amplitude can be combined with any measurable number of changes in phase.*

4-QAM and 8-QAM constellation

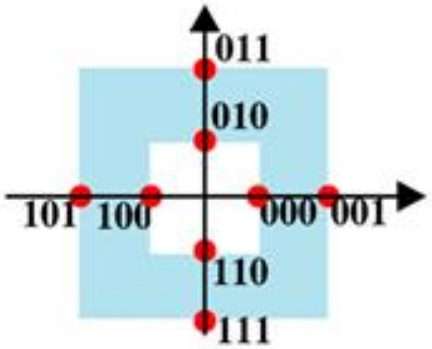

8-QAM
2 amplitudes, 4 phases
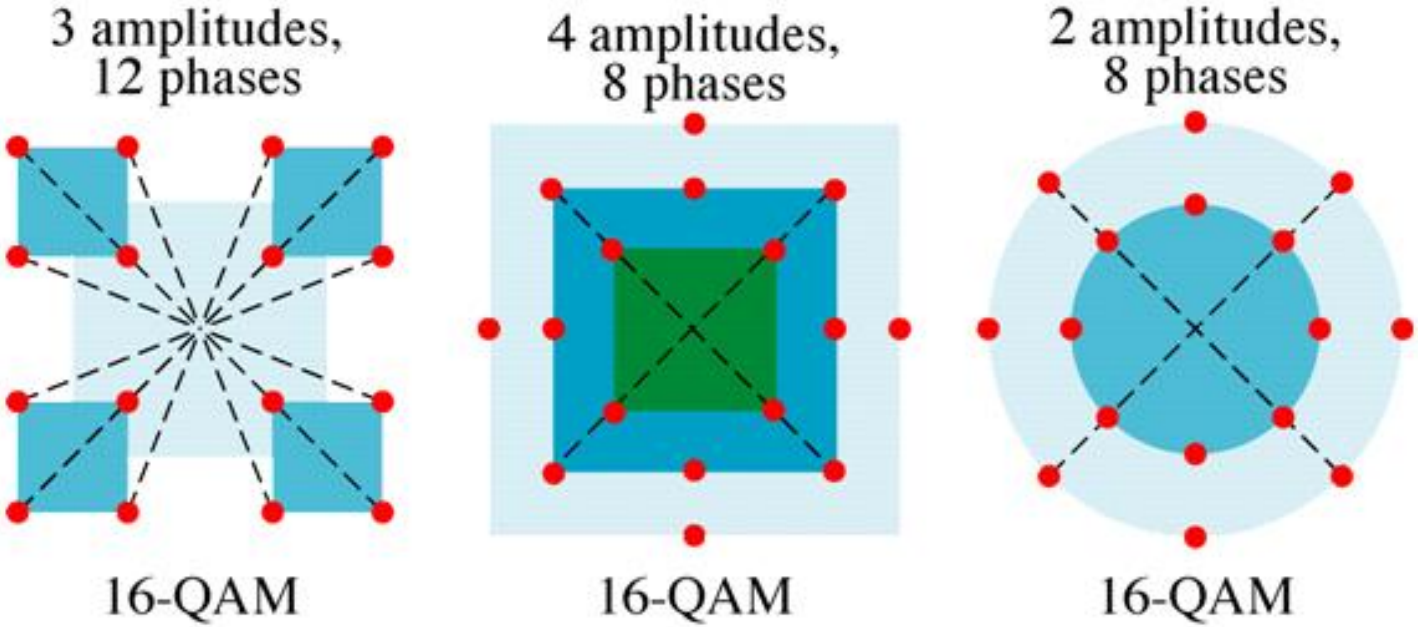
16-QAM constellation